MoraviaŘetězy

PRODUKTOVÝ KATALOG

Válečkové řetězy

Roller Chain

British Standard Roller Chain

BS228, ISO R606, DIN 8187

Series BS Roller Chain

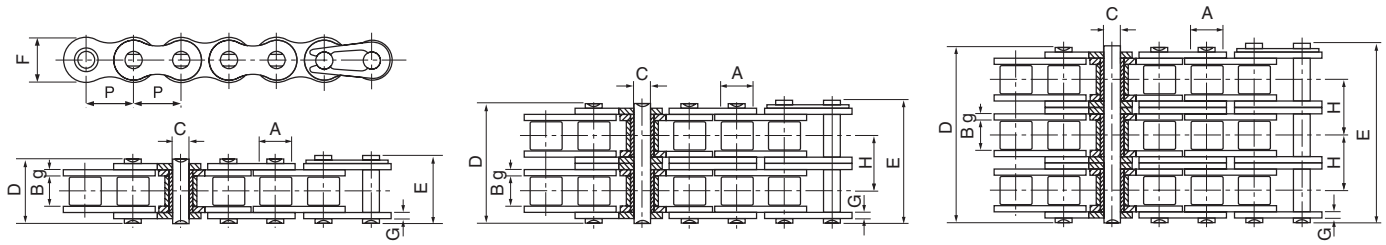

ISO Chain number	Pitch P	Roller diameter A	Width between inner plates B	Pin diameter C	Pin length D	Pin length E	Inner plate height F	Plate thick-ness g/G	Trans-verse pitch H	Minimum tensile strength kN	Average tensile strength kN	Weight kg/m
SIMPLEX												
04B-1	6.000	4.00	2.80	1.85	6.80	7.80	5.00	0.60	-	3.00	3.20	0.11
05B-1	8.000	5.00	3.00	2.31	8.20	8.90	7.10	0.80	-	5.00	5.90	0.20
*06B-1	9.525	6.35	5.72	3.28	13.15	14.10	8.20	1.30	-	9.00	10.40	0.41
08B-1	12.700	8.51	7.75	4.45	16.70	18.20	11.80	1.60	-	18.00	19.40	0.69
10B-1	15.875	10.16	9.65	5.08	19.50	20.90	14.70	1.70	-	22.40	27.50	0.93
12B-1	19.050	12.07	11.68	5.72	22.50	24.20	16.00	1.85	-	29.00	32.20	1.15
16B-1	25.400	15.88	17.02	8.28	36.10	37.40	21.00	4.15/3.1	-	60.00	72.80	2.71
20B-1	31.750	19.05	19.56	10.19	41.30	45.00	26.40	4.5/3.5	-	95.00	106.70	3.70
24B-1	38.100	25.40	25.40	14.63	53.40	57.80	33.20	6.0/4.8	-	160.00	178.00	7.10
28B-1	44.450	27.94	30.99	15.90	65.10	69.50	36.70	7.5/6.0	-	200.00	222.00	8.50
32B-1	50.800	29.21	30.99	17.81	66.00	71.00	42.00	7.0/6.0	-	250.00	277.50	10.25
40B-1	63.500	39.37	38.10	22.89	82.20	89.20	52.96	8.5/8.0	-	355.00	394.00	16.35
48B-1	76.200	48.26	45.72	29.24	99.10	107.00	63.80	12.0/10.0	-	560.00	621.60	25.00
56B-1	88.900	53.98	53.34	34.32	114.60	123.00	77.80	13.5/12.0	-	850.00	940.00	35.88
64B-1	101.600	63.50	60.96	39.40	130.00	138.50	90.17	15.0/13.0	-	1120.00	1240.00	46.50
DUPLEX												
05B-2	8.000	5.00	3.00	2.31	13.90	14.50	7.10	0.80	5.64	7.80	10.20	0.33
*06B-2	9.525	6.35	5.72	3.28	23.40	24.40	8.20	1.30	10.24	16.90	18.70	0.77
08B-2	12.700	8.51	7.75	4.45	31.20	32.20	11.80	1.60	13.92	32.00	38.70	1.34
10B-2	15.875	10.16	9.65	5.08	36.10	37.50	14.70	1.70	16.59	44.50	56.20	1.84
12B-2	19.050	12.07	11.68	5.72	42.00	43.60	16.00	1.85	19.46	57.80	66.10	2.31
16B-2	25.400	15.88	17.02	8.28	68.00	69.30	21.00	4.15/3.1	31.88	106.00	133.00	5.42
20B-2	31.750	19.05	19.56	10.19	77.80	81.50	26.40	4.5/3.5	36.45	170.00	211.20	7.20
24B-2	38.100	25.40	25.40	14.63	101.70	106.20	33.20	6.0/4.8	48.36	280.00	319.20	13.40
28B-2	44.450	27.94	30.99	15.90	124.60	129.10	36.70	7.5/6.0	59.56	360.00	406.80	16.60
32B-2	50.800	29.21	30.99	17.81	124.60	129.60	42.00	7.0/6.0	58.55	450.00	508.50	21.00
40B-2	63.500	39.37	38.10	22.89	154.50	161.50	52.96	8.5/8.0	72.29	630.00	711.90	32.00
48B-2	76.200	48.26	45.72	29.24	190.40	198.20	63.80	12.0/10.0	91.21	1000.00	1130.00	50.00
56B-2	88.900	53.98	53.34	34.32	221.20	229.60	77.80	13.5/12.0	106.60	1600.00	1760.00	71.76
64B-2	101.600	63.50	60.96	39.40	249.90	258.40	90.17	15.0/13.0	119.89	2000.00	2200.00	93.00
TRIPLEX												
05B-3	8.000	5.00	3.00	2.31	19.50	20.20	7.10	0.80	5.64	11.10	13.80	0.48
*06B-3	9.525	6.35	5.72	3.28	33.50	34.60	8.20	1.30	10.24	24.90	30.10	1.16
08B-3	12.700	8.51	7.75	4.45	45.10	46.10	11.80	1.60	13.92	47.50	57.80	2.03
10B-3	15.875	10.16	9.65	5.08	52.70	54.10	14.70	1.70	16.59	66.70	84.50	2.77
12B-3	19.050	12.07	11.68	5.72	61.50	63.10	16.00	1.85	19.46	86.70	101.80	3.46
16B-3	25.400	15.88	17.02	8.28	99.80	101.20	21.00	4.15/3.1	31.88	160.00	203.70	8.13
20B-3	31.750	19.05	19.56	10.19	114.20	117.90	26.40	4.5/3.5	36.45	250.00	290.00	10.82
24B-3	38.100	25.40	25.40	14.63	150.10	154.60	33.20	6.0/4.8	48.36	425.00	493.00	20.10
28B-3	44.450	27.94	30.99	15.90	184.20	188.70	36.70	7.5/6.0	59.56	530.00	609.50	24.92
32B-3	50.800	29.21	30.99	17.81	183.20	188.20	42.00	7.0/6.0	58.55	670.00	770.50	31.56
40B-3	63.500	39.37	38.10	22.89	226.80	233.80	52.96	8.5/8.0	72.29	950.00	1092.50	48.10
48B-3	76.200	48.26	45.72	29.24	281.60	289.40	63.80	12.0/10.0	91.21	1500.00	1710.00	75.00
56B-3	88.900	53.98	53.34	34.32	327.80	336.20	77.80	13.5/12.0	106.60	2240.00	2240.00	107.64
64B-3	101.600	63.50	60.96	39.40	369.80	378.30	90.17	15.0/13.0	119.89	3000.00	3300.00	139.50

Sizes 24B through to 64B are available with standard and spin riveted pins.

* Straight Side Plate Chain
Standard boxed lengths are 5 metres Special lengths available

All dimensions in millimetres unless otherwise stated.

Every effort has been taken to ensure that the data listed in this catalogue is correct. Company MR accepts no liability for any inaccuracies or damage caused.

Roller Chain

ANSI Standard Roller Chain

ANSI B29.1, ISO R606, DIN 8188

Series ANSI Roller Chain

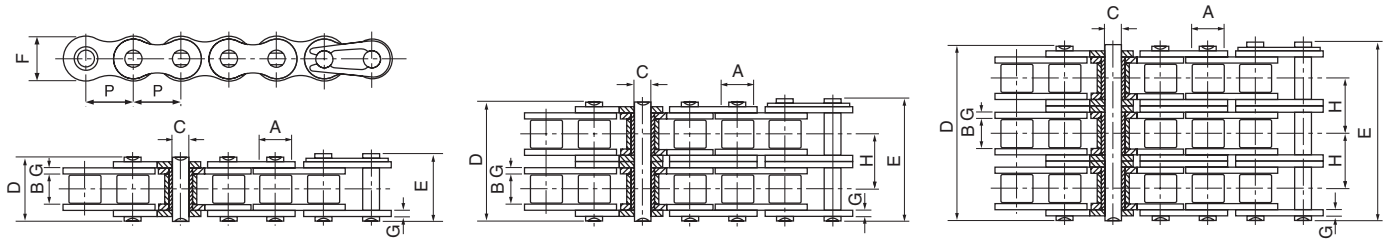

ISO Chain number	Pitch P	Roller diameter A	Width between inner plates B	Pin diameter C	Pin length D	Pin length E	Inner plate height F	Plate thick-ness g/G	Trans-verse pitch H	Minimum tensile strength kN	Average tensile strength kN	Weight kg/m
SIMPLEX												
*15-1	4.763	2.48	2.38	1.62	6.10	6.90	4.30	0.60	-	1.8	2.0	0.08
*25-1	6.350	3.30	3.18	2.31	7.90	8.40	6.00	0.80	-	3.5	4.6	0.15
*35-1	9.525	5.08	4.77	3.58	12.40	13.17	9.00	1.30	-	7.9	10.8	0.33
41-1	12.700	7.77	6.25	3.58	13.75	15.00	9.91	1.30	-	6.7	12.6	0.41
40-1	12.700	7.95	7.85	3.96	16.60	17.80	12.00	1.50	-	14.1	17.5	0.62
50-1	15.875	10.16	9.40	5.08	20.70	22.20	15.09	2.03	-	22.2	29.4	1.02
60-1	19.050	11.91	12.57	5.94	25.90	27.70	18.00	2.42	-	31.8	41.5	1.50
80-1	25.400	15.88	15.75	7.92	32.70	35.00	24.00	3.25	-	56.7	69.4	2.60
100-1	31.750	19.05	18.90	9.53	40.40	44.70	30.00	4.00	-	88.5	109.2	3.91
120-1	38.100	22.23	25.22	11.10	50.30	54.30	35.70	4.80	-	127.0	156.3	5.62
140-1	44.450	25.40	25.22	12.70	54.40	59.00	41.00	5.60	-	172.4	212.0	7.50
160-1	50.800	28.58	31.55	14.27	64.80	69.60	47.80	6.40	-	226.8	278.9	10.10
180-1	57.150	35.71	35.48	17.46	72.80	78.60	53.60	7.20	-	280.2	341.8	13.45
200-1	63.500	39.68	37.85	19.85	80.30	87.20	60.00	8.00	-	353.8	431.6	16.15
240-1	76.200	47.63	47.35	23.81	95.50	103.00	72.39	9.50	-	510.3	622.5	23.20
DUPLEX												
*25-2	6.350	3.30	3.18	2.31	14.50	15.00	6.00	0.80	6.40	7.0	8.6	0.28
*35-2	9.525	5.08	4.77	3.58	22.50	23.30	9.00	1.30	10.13	15.8	19.7	0.63
41-2	12.700	7.77	6.25	3.58	25.70	26.90	9.91	1.30	11.95	13.3	16.9	0.81
40-2	12.700	7.95	7.85	3.96	31.00	32.20	12.00	1.50	14.38	28.2	35.9	1.12
50-2	15.875	10.16	9.40	5.08	38.90	40.40	15.09	2.03	18.11	44.4	58.1	2.00
60-2	19.050	11.91	12.57	5.94	48.80	50.50	18.00	2.42	22.78	63.6	82.1	2.92
80-2	25.400	15.88	15.75	7.92	62.70	64.30	24.00	3.25	29.29	113.4	141.8	5.15
100-2	31.750	19.05	18.90	9.53	76.40	80.50	30.00	4.00	35.76	177.0	219.4	7.80
120-2	38.100	22.23	25.22	11.10	95.80	99.70	35.70	4.80	45.44	254.0	314.9	11.70
140-2	44.450	25.40	25.22	12.70	103.30	107.90	41.00	5.60	48.87	344.8	427.5	15.14
160-2	50.800	28.58	31.55	14.27	123.30	128.10	47.80	6.40	58.55	453.6	562.4	20.14
180-2	57.150	35.71	35.48	17.46	138.60	144.40	53.60	7.20	65.84	560.5	695.0	29.22
200-2	63.500	39.68	37.85	19.85	151.90	158.80	60.00	8.00	71.55	707.6	877.4	32.24
240-2	76.200	47.63	47.35	23.81	183.40	190.80	72.39	9.50	87.83	1020.6	1255.3	45.23
TRIPLEX												
*25-3	6.350	3.30	3.18	2.31	21.00	21.50	6.00	0.80	6.40	10.5	12.6	0.44
*35-3	9.525	5.08	4.77	3.58	32.70	33.50	9.00	1.30	10.13	23.7	28.6	1.05
40-3	12.700	7.95	7.85	3.96	45.40	46.60	12.00	1.50	14.38	42.3	50.0	1.90
50-3	15.875	10.16	9.40	5.08	57.00	58.50	15.09	2.03	18.11	66.6	77.8	3.09
60-3	19.050	11.91	12.57	5.94	71.50	73.30	18.00	2.42	22.78	95.4	111.1	4.54
80-3	25.400	15.88	15.75	7.92	91.70	93.60	24.00	3.25	29.29	170.1	198.4	7.89
100-3	31.750	19.05	18.90	9.53	112.20	116.30	30.00	4.00	35.76	265.5	309.6	11.77
120-3	38.100	22.23	25.22	11.10	141.40	145.20	35.70	4.80	45.44	381.0	437.2	17.53
140-3	44.450	25.40	25.22	12.70	152.20	156.80	41.00	5.60	48.87	517.2	593.3	22.20
160-3	50.800	28.58	31.55	14.27	181.80	186.60	47.80	6.40	58.55	680.4	780.6	30.02
180-3	57.150	35.71	35.48	17.46	204.40	210.20	53.60	7.20	65.84	840.7	983.6	38.22
200-3	63.500	39.68	37.85	19.85	223.50	230.40	60.00	8.00	71.55	1061.4	1217.8	49.03
240-3	76.200	47.63	47.35	23.81	271.30	278.60	72.39	9.50	87.83	1530.9	1756.5	71.60

* Bush chain: **A** in the table indicates the external diameter of the bush

Standard boxed lengths are 5 metres. Special lengths available.

All dimensions in millimetres unless otherwise stated.

Every effort has been taken to ensure that the data listed in this catalogue is correct. Company MR accepts no liability for any inaccuracies or damage caused.

Roller Chain

ANSI Heavy Duty Roller Chain

ANSI B29.1, ISO R606, DIN 8188

ANSI Heavy Duty Roller Chain

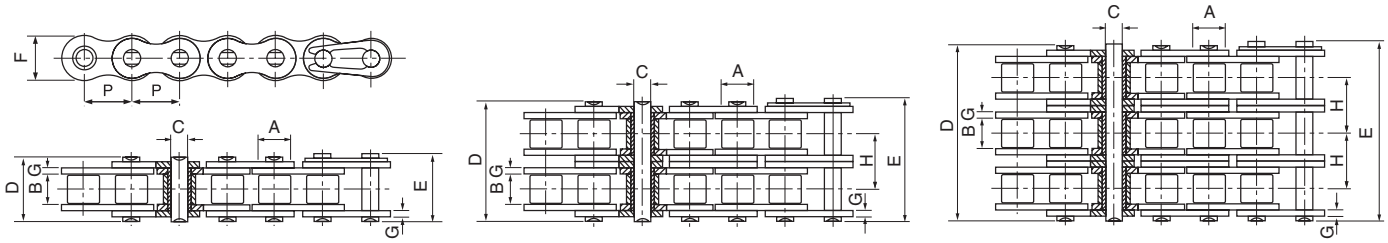

ANSI Chain number	Pitch P	Roller diameter A	Width between inner plates B	Pin diameter C	Pin length D	Pin length E	Inner plate height F	Plate thick-ness G	Trans-verse pitch H	Minimum tensile strength kN	Average tensile strength kN	Weight kg/m
SIMPLEX												
40H-1	12.700	7.95	7.85	3.96	18.80	19.90	12.00	2.03	-	14.10	19.10	0.82
50H-1	15.875	10.16	9.40	5.08	22.10	23.40	15.09	2.42	-	22.20	30.20	1.25
60H-1	19.050	11.91	12.57	5.94	29.20	31.00	18.00	3.25	-	31.80	42.70	1.87
80H-1	25.400	15.88	15.75	7.92	36.20	37.70	24.00	4.00	-	56.70	71.40	3.10
100H-1	31.750	19.05	18.90	9.53	43.60	46.90	30.00	4.80	-	88.50	112.40	4.52
120H-1	38.100	22.23	25.22	11.10	53.50	57.50	35.70	5.60	-	127.00	160.90	6.60
140H-1	44.450	25.40	25.22	12.70	57.60	62.20	41.00	6.40	-	172.40	217.30	8.30
160H-1	50.800	28.58	31.55	14.27	68.20	73.00	47.80	7.20	-	226.80	285.80	10.30
200H-1	63.500	39.68	37.85	19.85	86.60	93.50	60.00	9.50	-	353.80	444.50	19.16
DUPLEX												
60H-2	19.050	11.91	12.57	5.94	55.30	57.10	18.00	3.25	26.11	63.60	84.50	3.71
80H-2	25.400	15.88	15.75	7.92	68.80	70.30	24.00	4.00	32.59	113.40	145.30	6.15
100H-2	31.750	19.05	18.90	9.53	82.70	86.00	30.00	4.80	39.09	177.00	225.90	9.03
120H-2	38.100	22.23	25.22	11.10	102.40	106.40	35.70	5.60	48.87	254.00	322.70	13.13
140H-2	44.450	25.40	25.22	12.70	109.80	114.40	41.00	6.40	52.20	344.80	437.70	16.60
160H-2	50.800	28.58	31.55	14.27	130.10	134.90	47.80	7.20	61.90	453.60	571.60	20.20
200H-2	63.500	39.68	37.85	19.85	164.90	171.80	60.00	9.50	78.31	707.60	894.90	38.11
TRIPLEX												
60H-3	19.050	11.91	12.57	5.94	81.40	83.20	18.00	3.25	26.11	95.40	113.90	5.54
80H-3	25.400	15.88	15.75	7.92	101.40	102.90	24.00	4.00	32.59	170.10	203.50	9.42
100H-3	31.750	19.05	18.90	9.53	121.80	125.10	30.00	4.80	39.09	265.50	314.80	12.96
120H-3	38.100	22.23	25.22	11.10	151.20	155.20	35.70	5.60	48.87	381.00	444.70	19.64
140H-3	44.450	25.40	25.22	12.70	162.00	166.60	41.00	6.40	52.20	517.20	598.40	24.90
160H-3	50.800	28.58	31.55	14.27	192.00	196.80	47.80	7.20	61.90	680.40	787.30	30.10
200H-3	63.500	39.68	37.85	19.85	243.20	250.10	60.00	9.50	78.31	1061.40	1228.20	57.06

Standard boxed lengths are 5 metres
Special lengths available.

All dimensions in millimetres unless otherwise stated.

Every effort has been taken to ensure that the data listed in this catalogue is correct. Company MR accepts no liability for any inaccuracies or damage caused.

Roller Chain

ANSI Straight Side Plate Roller Chain

ANSI B29.1, ISO R606, DIN 8188

ANSI Straight Side Plate Roller Chain

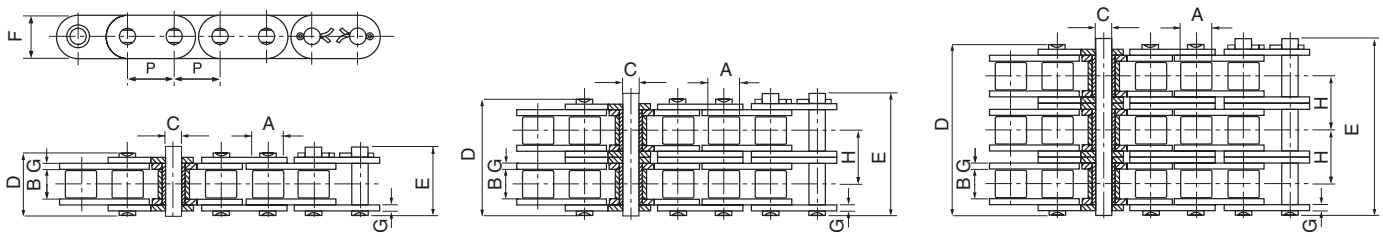

ANSI Chain number	Pitch P	Roller diameter A	Width between inner plates B	Pin diameter C	Pin length D	Pin length E	Inner plate height F	Plate thick-ness G	Trans-verse pitch H	Minimum tensile strength kN	Average tensile strength kN	Weight kg/m
SIMPLEX												
C40-1	12.700	7.95	7.85	3.96	16.60	18.80	12.00	1.50	-	14.10	17.50	0.73
C50-1	15.875	10.16	9.40	5.08	20.70	23.30	15.09	2.03	-	22.20	29.40	1.23
C60-1	19.050	11.91	12.57	5.94	25.90	28.30	18.0/18.2	2.42	-	31.80	41.50	1.81/1.83
C80-1	25.400	15.88	15.75	7.92	32.70	36.50	24.00	3.25	-	56.70	69.40	3.09
C100-1	31.750	19.05	18.90	9.53	40.40	44.70	30.00	4.00	-	88.50	109.20	4.56
C120-1	38.100	22.23	25.22	11.10	50.30	54.30	35.70	4.80	-	127.00	156.30	6.86
C140-1	44.450	25.40	25.22	12.70	54.40	59.00	41.00	5.60	-	172.40	212.00	8.49
C160-1	50.800	28.58	31.55	14.27	64.80	69.60	47.80	6.40	-	226.80	278.90	11.50
DUPLEX												
C40-2	12.700	7.95	7.85	3.96	31.00	33.20	12.00	1.50	14.38	28.20	35.90	1.43
C50-2	15.875	10.16	9.40	5.08	38.90	41.40	15.09	2.03	18.11	44.40	58.10	2.42
C60-2	19.050	11.91	12.57	5.94	48.80	51.10	18.0/18.2	2.42	22.78	63.60	82.10	3.58/3.62
C80-2	25.400	15.88	15.75	7.92	62.70	65.80	24.00	3.25	29.29	113.40	141.80	6.12
C100-2	31.750	19.05	18.90	9.53	76.40	80.50	30.00	4.00	35.76	177.00	219.40	9.08
C120-2	38.100	22.23	25.22	11.10	95.80	99.70	35.70	4.80	45.44	254.00	314.90	13.60
C140-2	44.450	25.40	25.22	12.70	103.30	107.90	41.00	5.60	48.87	344.80	427.50	16.86
C160-2	50.800	28.58	31.55	14.27	123.30	128.10	47.80	6.40	58.55	453.60	562.40	22.90
TRIPLEX												
C40-3	12.700	7.95	7.85	3.96	45.40	47.60	12.00	1.50	14.38	42.30	50.00	2.14
C50-3	15.875	10.16	9.40	5.08	57.00	59.50	15.09	2.03	18.11	66.60	77.80	3.62
C60-3	19.050	11.91	12.57	5.94	71.50	73.90	18.0/18.2	2.42	22.78	95.40	111.10	5.36/5.41
C80-3	25.400	15.88	15.75	7.92	91.70	95.10	24.00	3.25	29.29	170.10	198.40	9.10
C100-3	31.750	19.05	18.90	9.53	112.20	116.30	30.00	4.00	35.76	265.50	309.60	13.60
C120-3	38.100	22.23	25.22	11.10	141.40	145.20	35.70	4.80	45.44	381.00	437.20	20.43
C140-3	44.450	25.40	25.22	12.70	152.20	156.80	41.00	5.60	48.87	517.20	593.30	25.23
C160-3	50.800	28.58	31.55	14.27	181.80	186.60	47.80	6.40	58.55	680.40	780.60	34.19

Standard boxed lengths are 5 metres
Special lengths available.

Chain Pullers

Model	Range From inch	Range To inch
CB-105 (Small)	1/4”	3/4”
CB-106 (Large)	3/4”	1.1/4”

CB-105

CB-106

All dimensions in millimetres unless otherwise stated.

Every effort has been taken to ensure that the data listed in this catalogue is correct. Company MR accepts no liability for any inaccuracies or damage caused.

Roller Chain

BS Straight Side Plate Roller Chain

ANSI B29.1, ISO R606, DIN 8187

BS Straight Side Plate Roller Chain

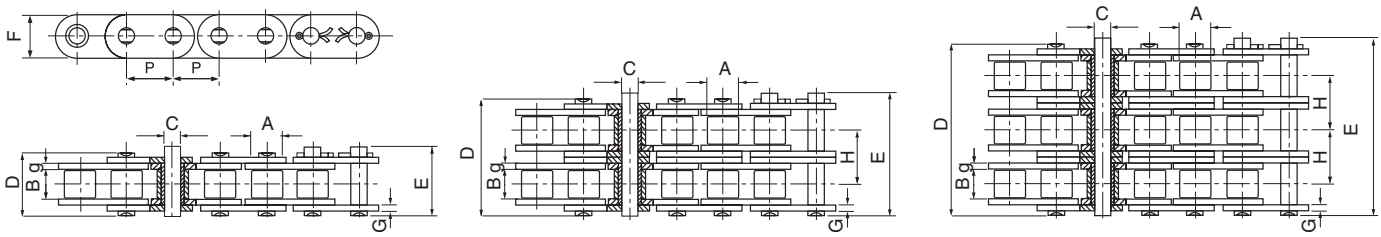

ISO Chain number	Pitch P	Roller diameter A	Width between inner plates B	Pin diameter C	Pin length D	Pin length E	Inner plate height F	Plate thick-ness g/G	Trans-verse pitch H	Minimum tensile strength kN	Average tensile strength kN	Weight kg/m
SIMPLEX												
08B-1 GL	12.700	8.51	7.75	4.45	16.70	18.20	11.80	1.60	-	18.00	19.50	0.80
10B-1 GL	15.875	10.16	9.65	5.08	19.50	20.90	14.70	1.70	-	22.40	27.90	1.06
12B-1 GL	19.050	12.07	11.68	5.72	22.50	25.20	16.00	1.85	-	29.00	32.20	1.32
16B-1 GL	25.400	15.88	17.02	8.28	36.10	39.10	21.0/24.0	4.15/3.1	-	60.00	72.80	3.08/3.49
20B-1 GL	31.750	19.05	19.56	10.19	41.30	45.00	26.40	4.5/3.5	-	95.00	106.70	4.16
24B-1 GL	38.100	25.40	25.40	14.63	53.40	57.80	33.20	6.0/4.8	-	160.00	178.00	7.47
28B-1 GL	44.450	27.94	30.99	15.90	65.10	69.50	36.70	7.5/6.0	-	200.00	222.00	9.90
32B-1 GL	50.800	29.21	30.99	17.81	66.00	71.00	42.00	7.0/6.0	-	250.00	277.50	10.45
DUPLEX												
08B-2 GL	12.700	8.51	7.75	4.45	31.20	32.20	11.80	1.60	13.92	32.00	38.70	1.45
10B-2 GL	15.875	10.16	9.65	5.08	36.10	37.50	14.70	1.70	16.59	44.50	57.80	2.00
12B-2 GL	19.050	12.07	11.68	5.72	42.00	44.70	16.00	1.85	19.46	57.80	66.10	2.62
16B-2 GL	25.400	15.88	17.02	8.28	68.00	71.00	21.0/24.0	4.15/3.1	31.88	106.00	133.00	6.10/6.92
20B-2 GL	31.750	19.05	19.56	10.19	77.80	81.50	26.40	4.5/3.5	36.45	170.00	211.20	8.23
24B-2 GL	38.100	25.40	25.40	14.63	101.70	106.20	33.20	6.0/4.8	48.36	280.00	319.20	14.77
28B-2 GL	44.450	27.94	30.99	15.90	124.60	129.10	36.70	7.5/6.0	59.56	360.00	406.80	19.82
32B-2 GL	50.800	29.21	30.99	17.81	124.60	129.60	42.00	7.0/6.0	58.55	450.00	508.50	20.94
TRIPLEX												
08B-3 GL	12.700	8.51	7.75	4.45	45.10	46.10	11.80	1.60	13.92	47.50	57.80	2.10
10B-3 GL	15.875	10.16	9.65	5.08	52.70	54.10	14.70	1.70	16.59	66.70	84.50	2.87
12B-3 GL	19.050	12.07	11.68	5.72	61.50	64.20	16.00	1.85	19.46	86.70	101.80	3.89
16B-3 GL	25.400	15.88	17.02	8.28	99.80	102.90	21.0/24.0	4.15/3.1	31.88	160.00	203.70	9.12/10.34
20B-3 GL	31.750	19.05	19.56	10.19	114.20	117.90	26.40	4.5/3.5	36.45	250.00	290.00	11.34
24B-3 GL	38.100	25.40	25.40	14.63	150.10	154.60	33.20	6.0/4.8	48.36	425.00	493.00	22.10
28B-3 GL	44.450	27.94	30.99	15.90	184.20	188.70	36.70	7.5/6.0	59.56	530.00	609.50	29.64
32B-3 GL	50.800	29.21	30.99	17.81	183.20	188.20	42.00	7.0/6.0	58.55	670.00	770.50	31.27

Standard boxed lengths are 5 metres
Special lengths available.

All dimensions in millimetres unless otherwise stated.

Every effort has been taken to ensure that the data listed in this catalogue is correct. Company MR accepts no liability for any inaccuracies or damage caused.

Special Transmission Roller Chain

Special Transmission Roller Chain

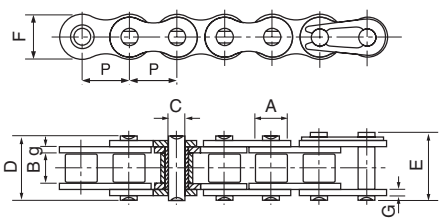

ISO Chain number	Pitch P	Roller diameter A	Width between inner plates B	Pin diameter C	Pin length D	Pin length E	Inner plate height F	Plate thick-ness g/G	Minimum tensile strength kN	Average tensile strength kN	Weight kg/m
04BH	6.00	4.00	2.80	1.85	8.40	9.40	5.00	0.90	5.00	5.30	0.14
081	12.70	7.75	3.30	3.66	9.30	12.30	9.90	1.00	8.00	9.40	0.28
084	12.70	7.75	4.88	4.09	14.60	17.60	11.50	1.80	15.60	15.70	0.51
415	12.70	7.77	4.76	3.60	11.00	12.40	9.70	1.00	6.86	7.60	0.32
415H	12.70	7.77	4.76	3.96	13.10	14.50	12.00	1.50	14.40	16.10	0.55
415B/083	12.70	7.75	4.88	4.09	12.90	14.40	10.30	1.30	12.00	14.20	0.44
415BF1	12.70	7.75	4.88	4.09	11.50	13.00	10.30	1.00	9.00	10.60	0.38
423	12.70	8.51	6.40	4.45	15.60	17.10	12.40	1.70	19.60	21.90	0.71
478	12.70	7.80	4.80	4.00	11.60	13.65	10.46	1.25	9.80	12.80	0.39
08BF	12.70	8.51	5.55	4.45	14.60	16.10	11.80	1.60	17.80	19.20	0.66
12BH	19.05	12.07	11.68	5.94	25.20	26.80	16.00	2.42	40.00	44.40	1.45
12BHF1	19.05	12.07	11.68	6.10	25.00	27.20	16.50	2.50	44.00	48.80	1.46
16BF1	25.40	15.88	12.20	8.28	31.40	32.70	21.00	4.15/3.1	60.00	71.40	2.60
16BF2	25.40	15.88	17.02	8.28	38.60	39.80	21.00	4.15	60.00	71.40	3.08
16BF5	25.40	15.88	12.70	8.28	30.80	32.10	20.00	3.5/3.0	50.00	57.50	2.37
16BH	25.40	15.88	17.02	8.90	35.70	38.90	24.10	4.0/3.1	80.00	94.20	3.11
24BH	38.10	25.40	25.40	14.63	58.60	63.40	36.20	7.5/6.0	225.00	250.30	9.00

Extended Pin Chain

ISO Chain No.	ANSI Chain No.	P	B	C	S	D	E
	35	9.525	4.77	3.58	9.50	20.80	21.60
	40	12.700	7.85	3.96	9.50	25.10	26.20
	50	15.875	9.40	5.08	11.90	31.30	33.10
	60	19.050	12.57	5.94	14.30	38.60	40.60
	80	25.400	15.75	7.92	19.10	50.30	53.30
	100	31.750	18.90	9.53	23.80	61.80	66.10
	120	38.100	25.22	11.10	28.60	76.40	80.40
	140	44.450	25.22	12.70	33.30	84.80	89.40
	160	50.800	31.55	14.27	38.10	99.60	104.40
08B		12.700	7.75	4.45	9.50	25.10	26.60
10B		15.875	9.65	5.08	11.90	30.10	31.50
12B		19.050	11.68	5.72	14.30	35.40	37.10
16B		25.400	17.02	8.28	19.10	53.00	54.30

D-1 & D-3 Pins

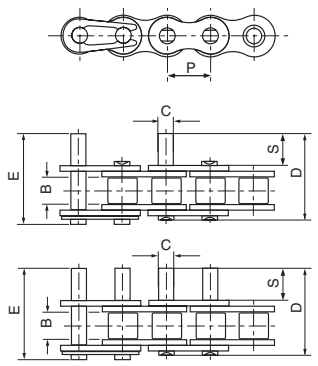

Standard boxed lengths are 5 metres
Special lengths available.

Every effort has been taken to ensure that the data listed in this catalogue is correct. Company MR accepts no liability for any inaccuracies or damage caused.

Roller Chain

Hollow Pin Chain

Hollow Pin Chain

Type A Bushed

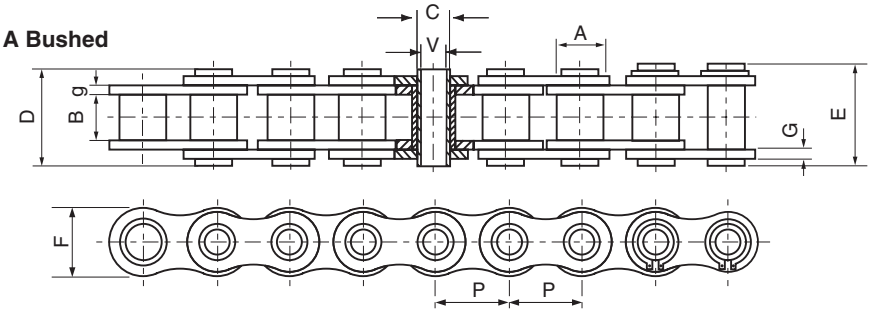

Type C Roller

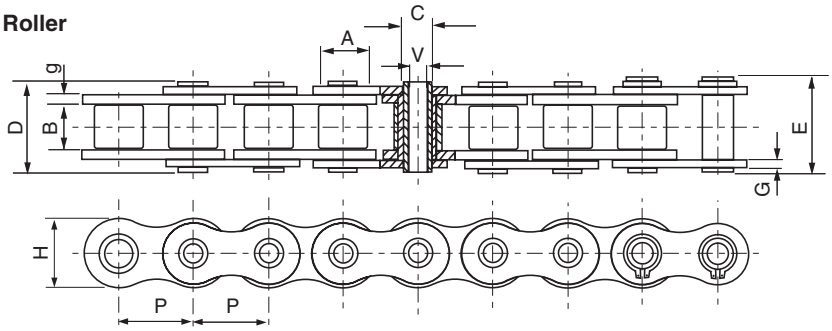

Chain number	Pitch P	Roller/Bush diameter A	Width between inner plates B	Pin diameter C	Pin diameter V	Pin length D	Pin length E	Inner plate height F	Plate thick-ness g/G	Minimum tensile strength kN	Average tensile strength kN	Weight kg/m	Type form
08BHP(4.0)	12.700	8.51	7.75	6.55	4.00	16.4	17.6	11.80	1.6/1.3	11.10	12.1	0.60	A
08BHP(4.5)	12.700	8.51	7.75	6.55	4.50	16.4	17.6	11.80	1.6/1.3	11.10	12.1	0.56	A
10BHP	15.875	10.16	9.65	5.94	4.04	19.3	20.6	14.70	1.70	17.00	20.8	0.86	C
12BHP	19.050	12.07	11.68	6.50	4.00	21.6	22.8	15.90	1.85	23.60	25.9	1.09	C
40HP	12.700	7.95	7.85	5.63	4.00	16.5	17.6	12.00	1.50	11.00	12.2	0.54	A
50HP	15.875	10.16	9.40	7.03	5.13	20.7	21.9	15.09	2.03	20.00	22.6	0.91	A
60HP	19.050	11.91	12.70	8.31	6.00	25.8	26.8	18.00	2.42	24.00	26.9	1.29	A
60HPF1	19.050	11.91	12.70	8.31	5.01	25.5	26.8	18.00	2.42	28.00	30.9	1.37	A
60HB	19.050	11.91	12.70	7.00	5.01	25.5	26.6	18.00	2.42	20.00	22.4	1.35	C
80HP	25.400	15.88	15.75	11.40	8.05	32.5	33.8	24.00	3.25	50.00	58.3	2.26	A

All dimensions in millimetres unless otherwise stated.

Every effort has been taken to ensure that the data listed in this catalogue is correct. Company MR accepts no liability for any inaccuracies or damage caused.

Conveyor Chain

Accumulation Chain

Accumulation Chain

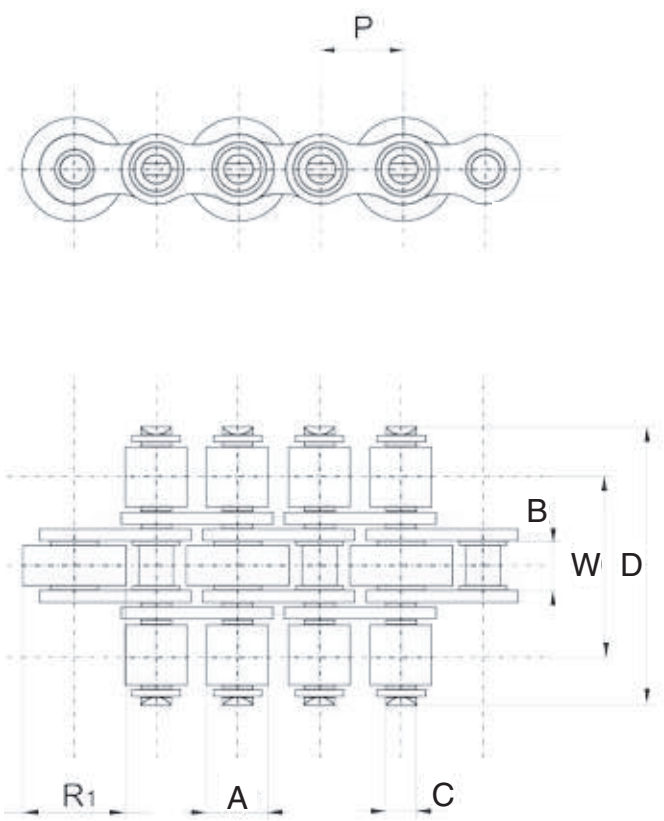

Chain number	Pitch P	Roller diameter. A	Width between inner plates B	Pin diameter C	Pin length D	Roller diameter R_1	Roller pitch W	Tensile strength kN	Weight kg/m
08B-1/S6	12.70	8.51	7.75	4.47	27	16.0	19.1	18.2	1.17
08B-1/S7	12.70	8.51	7.75	4.47	33	16.0	22.0	18.2	1.38
12B-1/S1	19.05	12.07	11.68	5.72	48	26.0	31.5	29.5	3.50
12B-1/S2	19.05	12.07	11.68	5.72	43	26.0	29.2	29.5	3.20
12B-1/S2a	19.05	12.07	11.68	5.72	43	24.0	29.2	29.5	2.80
12B-1/S3	19.05	12.07	11.68	5.72	40	28.0	27.0	29.5	3.40
16B-1/S5	25.40	15.88	17.02	8.28	65	38.5	44.9	58.0	7.00

All dimensions in millimetres unless otherwise stated.

Every effort has been taken to ensure that the data listed in this catalogue is correct. Company MR accepts no liability for any inaccuracies or damage caused.

Accumulation Chain

Accumulation Chain

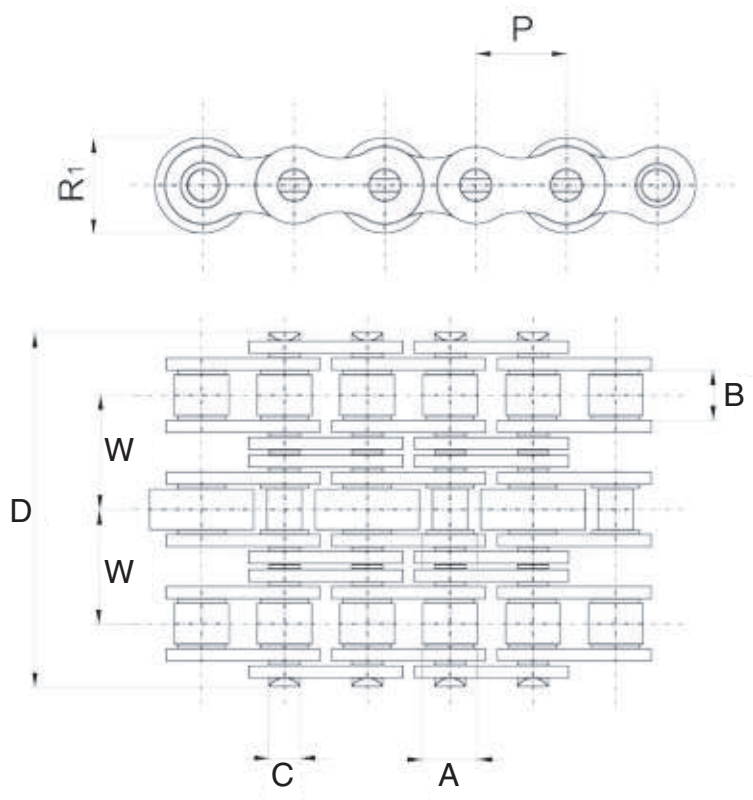

Chain number	Pitch	Roller diameter	Width between inner plate	Pin diameter	Pin length	Roller diameter	Roller pitch	Tensile strength
	P	A	B	C	D	R_1	W	kN
12B-3/S2a	19.05	12.07	11.68	5.72	61.7	24.0	19.46	88.5
12B-3/S2	19.05	12.07	11.68	5.72	61.7	26.0	19.46	88.5

All dimensions in millimetres unless otherwise stated.

Every effort has been taken to ensure that the data listed in this catalogue is correct. Company MR accepts no liability for any inaccuracies or damage caused.

Stainless Steel Transmission Roller Chain (Grade 304)

Stainless Steel Transmission Roller Chain

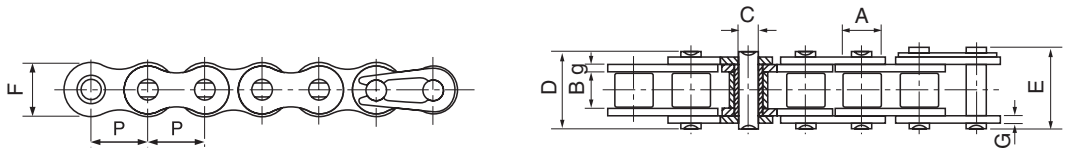

ISO Chain number	ANSI Chain number	Pitch P	Roller diameter A	Width between inner plates B	Pin diameter C	Pin length D	Pin length E	Inner plate height F	Plate thick-ness g/G	Minimum tensile strength kN	Average tensile strength kN	Weight kg/m
	*35SS	9.525	5.08	4.77	3.58	12.40	13.17	9.00	1.30	5.50	6.60	0.33
	40SS	12.700	7.95	7.85	3.96	16.60	17.80	12.00	1.50	9.60	10.80	0.63
	50SS	15.875	10.16	9.40	5.08	20.70	22.20	15.09	2.03	15.20	17.20	1.03
	60SS	19.050	11.91	12.57	5.94	25.90	27.70	18.00	2.42	21.70	26.40	1.51
	80SS	25.400	15.88	15.75	7.92	32.70	35.00	24.00	3.25	38.90	46.60	2.62
	100SS	31.750	19.05	18.90	9.53	40.40	44.70	30.00	4.00	60.00	70.20	3.94
04BSS		6.000	4.00	2.80	1.85	6.80	7.80	5.00	0.60	2.00	2.40	0.11
05BSS		8.000	5.00	3.00	2.31	8.20	8.90	7.10	0.80	3.50	4.10	0.20
#06BSS		9.525	6.35	5.72	3.28	13.15	14.10	8.20	1.30	6.20	6.80	0.41
08BSS		12.700	8.51	7.75	4.45	16.70	18.20	11.80	1.60	12.00	14.30	0.70
10BSS		15.875	10.16	9.65	5.08	19.50	20.90	14.70	1.70	14.50	17.20	0.94
12BSS		19.050	12.07	11.68	5.72	22.50	24.20	16.00	1.85	18.50	20.90	1.16
16BSS		25.400	15.88	17.02	8.28	36.10	37.40	21.00	4.15/3.1	40.00	47.60	2.73
20BSS		31.750	19.05	19.56	10.19	41.30	45.00	26.40	4.5/3.5	59.00	69.60	3.73

* Bush chain: **A** in the table indicates the external diameter of the bush
# Straight side plate chain

Standard boxed lengths are 5 metres
Special lengths available.

Every effort has been taken to ensure that the data listed in this catalogue is correct. Company MR accepts no liability for any inaccuracies or damage caused.

Roller Chain

Nickel Plated Transmission Roller Chain

Nickel + Zinc Plated Transmission Roller Chain

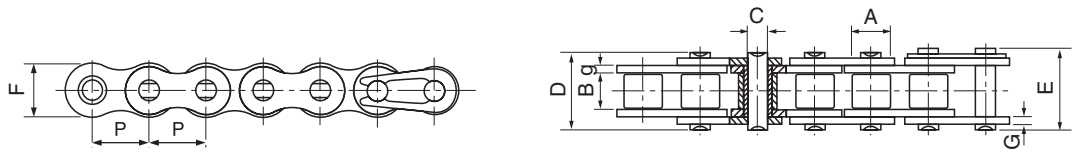

ISO Chain number	ANSI Chain number	Pitch P	Roller diameter A	Width between inner plates B	Pin diameter C	Pin length D	Pin length E	Inner plate height F	Plate thick-ness g/G	Minimum tensile strength kN	Average tensile strength kN	Weight kg/m
	*25NP	6.350	3.30	3.18	2.31	7.90	8.40	6.00	0.80	3.50	4.60	0.15
	*35NP	9.525	5.08	4.77	3.58	12.40	13.17	9.00	1.30	7.90	10.80	0.33
	41NP	12.700	7.77	6.25	3.58	13.75	15.00	9.91	1.30	6.67	12.60	0.41
	40NP	12.700	7.95	7.85	3.96	16.60	17.80	12.00	1.50	14.10	17.50	0.62
	50NP	15.875	10.16	9.40	5.08	20.70	22.20	15.09	2.03	22.20	29.40	1.02
	60NP	19.050	11.91	12.57	5.94	25.90	27.70	18.00	2.42	31.80	41.50	1.50
	80NP	25.400	15.88	15.75	7.92	32.70	35.00	24.00	3.25	56.70	69.40	2.60
	100NP	31.750	19.05	18.90	9.53	40.40	44.70	30.00	4.00	88.50	109.20	3.91
04BNP		6.000	4.00	2.80	1.85	6.80	7.80	5.00	0.60	3.00	3.20	0.11
05BNP		8.000	5.00	3.00	2.31	8.20	8.90	7.10	0.80	5.00	5.90	0.20
#06BNP		9.525	6.35	5.72	3.28	13.15	14.10	8.20	1.30	9.00	10.40	0.41
08BNP		12.700	8.51	7.75	4.45	16.70	18.20	11.80	1.60	18.00	19.40	0.69
10BNP		15.875	10.16	9.65	5.08	19.50	20.90	14.70	1.70	22.40	27.50	0.93
12BNP		19.050	12.07	11.68	5.72	22.50	24.20	16.00	1.85	29.00	32.20	1.15
16BNP		25.400	15.88	17.02	8.28	36.10	37.40	21.00	4.15/3.1	60.00	72.80	2.71
20BNP		31.750	19.05	19.56	10.19	41.30	45.00	26.40	4.5/3.5	95.00	106.70	3.70

Zinc Plated Transmission Roller Chain

ISO Chain number	ANSI Chain number	Pitch P	Roller diameter A	Width between inner plates B	Pin diameter C	Pin length D	Pin length E	Inner plate height F	Plate thick-ness g/G	Minimum tensile strength kN	Average tensile strength kN	Weight kg/m
	*25ZP	6.350	3.30	3.18	2.31	7.90	8.40	6.00	0.80	3.50	4.60	0.14
	*35ZP	9.525	5.08	4.77	3.58	12.40	13.17	9.00	1.30	7.90	10.80	0.33
	41ZP	12.700	7.77	6.25	3.58	13.75	15.00	9.91	1.30	6.67	12.60	0.41
	40ZP	12.700	7.95	7.85	3.96	16.60	17.80	12.00	1.50	14.10	17.50	0.62
	50ZP	15.875	10.16	9.40	5.08	20.70	22.20	15.09	2.03	22.20	29.40	1.02
	60ZP	19.050	11.91	12.57	5.94	25.90	27.70	18.00	2.42	31.80	41.50	1.50
	80ZP	25.400	15.88	15.75	7.92	32.70	35.00	24.00	3.25	56.70	69.40	2.60
	100ZP	31.750	19.05	18.90	9.53	40.40	44.70	30.00	4.00	88.50	109.20	3.91
04BZP		6.000	4.00	2.80	1.85	6.80	7.80	5.00	0.60	3.00	3.20	0.11
05BZP		8.000	5.00	3.00	2.31	8.20	8.90	7.10	0.80	5.00	5.90	0.20
#06BZP		9.525	6.35	5.72	3.28	13.15	14.10	8.20	1.30	9.00	10.40	0.41
08BZP		12.700	8.51	7.75	4.45	16.70	18.20	11.80	1.60	18.00	19.40	0.69
10BZP		15.875	10.16	9.65	5.08	19.50	20.90	14.70	1.70	22.40	27.50	0.93
12BZP		19.050	12.07	11.68	5.72	22.50	24.20	16.00	1.85	29.00	32.20	1.15
16BZP		25.400	15.88	17.02	8.28	36.10	37.40	21.00	4.15/3.1	60.00	72.80	2.71
20BZP		31.750	19.05	19.56	10.19	41.30	45.00	26.40	4.5/3.5	95.00	106.70	3.70

* Bush chain: **A** in the table indicates the external diameter of the bush
# Straight side plate chain

Standard boxed lengths are 5 metres
Special lengths available.

All dimensions in millimetres unless otherwise stated.

Every effort has been taken to ensure that the data listed in this catalogue is correct. Company MR accepts no liability for any inaccuracies or damage caused.

Side Bow Chain with Loose Tolerance Pin

Side Bow Chain with Loose Tolerance Pin

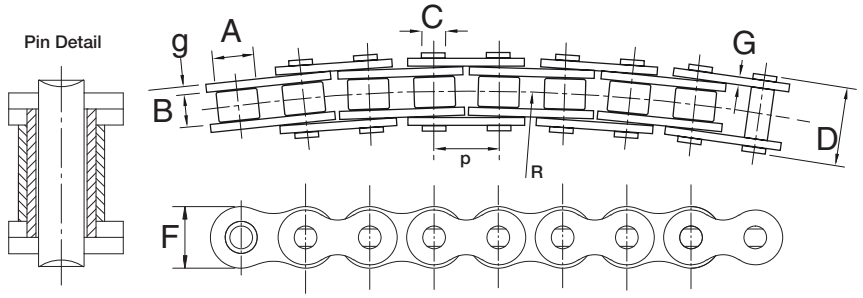

Chain number	Pitch P	Roller diameter A	Width between inner plates B	Pin diameter C	Pin length D	Inner plate height F	Plate thickness g/G	Min. side bow radius R	Average tensile strength kN	Weight kg/m
40SB	12.700	7.95	7.85	3.45	16.9	11.7	1.50	350	11.00	0.80
50SB	15.875	10.16	9.40	4.37	20.7	14.9	2.03	400	20.00	1.09
60SB	19.050	11.91	12.57	5.34	26.6	18.0	2.42	500	28.00	1.54
63SB	19.050	11.91	12.68	5.08	28.8	17.2	2.42 / 2.03	350	25.00	1.40
80SB	25.400	15.88	15.75	7.19	34.0	24.0	3.25	715	39.00	2.60
08BSB	12.700	8.51	7.75	3.97	17.4	11.8	1.50	400	11.20	0.70
08BSBF1	12.700	8.51	7.75	3.97	16.3	11.8	1.60 / 1.20	400	11.00	0.65
10BSB	15.875	10.16	9.65	4.50	20.1	14.7	1.70	400	18.70	0.93
12BSB	19.050	12.07	11.68	5.12	23.1	16.0	1.85	500	21.00	1.16
16BSB	25.400	15.88	17.22	7.90	36.5	21.0	3.70 - 3.00	500	53.50	2.53

Side Bow Chain with Conical Pin

Side Bow Chain with Conical Pin

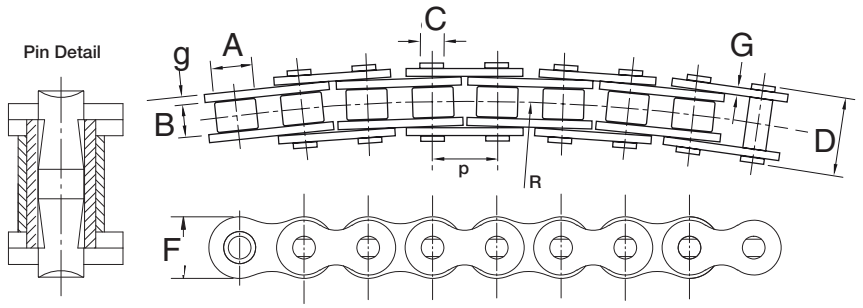

Chain number	Pitch P	Roller diameter A	Width between inner plates B	Pin diameter C	Pin length D	Inner plate height F	Plate thickness g/G	Min. side bow radius R	Average tensile strength kN	Weight kg/m
40SB	12.700	7.95	7.85	3.98	16.9	11.7	1.50	350	11.00	0.80
50SB	15.875	10.16	9.40	5.08	20.7	14.9	2.03	400	20.00	1.09
60SB	19.050	11.91	12.57	5.94	26.6	18.0	2.42	500	28.00	1.54
80SB	25.400	15.88	15.75	7.92	34.0	24.0	3.25	711	39.00	2.60
08BSB	12.700	8.51	7.75	4.45	17.4	11.8	1.50	400	11.20	0.70
08BSBF1	12.700	8.51	7.75	4.45	16.3	11.8	1.60 - 1.20	400	11.00	0.65
10BSB	15.875	10.16	9.65	5.08	20.1	14.7	1.70	400	18.70	0.93
12BSB	19.050	12.07	11.68	5.72	23.1	16.0	1.85	500	21.00	1.16
16BSB	25.400	15.88	17.22	8.28	36.5	21.0	3.70 - 3.00	500	53.50	2.53
C2050SB	31.750	10.16	9.40	5.08	21.3	15.0	2.03	800	20.50	0.84

All dimensions in millimetres unless otherwise stated.

Every effort has been taken to ensure that the data listed in this catalogue is correct. Company MR accepts no liability for any inaccuracies or damage caused.

Roller Chain Attachments

A-1 & K-1 Attachments

ISO No.	ANSI No.	P	I	J	K	L	M	O
	40	12.700	9.50	25.40	35.20	1.50	7.90	3.40
	50	15.875	12.70	31.75	46.20	2.03	10.30	5.50
	60	19.050	15.90	38.10	55.60	2.42	11.90	5.50
	80	25.400	19.10	50.80	64.80	3.25	15.90	6.80
	100	31.750	25.40	63.50	87.30	4.00	19.80	9.20
	120	38.100	28.60	76.20	108.50	4.80	23.00	9.80
	140	44.450	34.90	88.90	123.00	5.60	28.60	11.40
	160	50.800	38.10	101.60	142.80	6.40	31.80	13.10
*06B		9.525	8.00	19.04	27.00	1.30	6.50	3.50
08B		12.700	9.50	25.40	36.40	1.60	8.90	4.50
10B		15.875	14.30	31.75	44.60	1.70	10.31	5.30
12B		19.050	16.00	38.10	52.40	1.85	13.46	6.40
16B		25.400	19.10	50.80	72.60	3.10	15.88	6.40

A1 & K1 Attachments

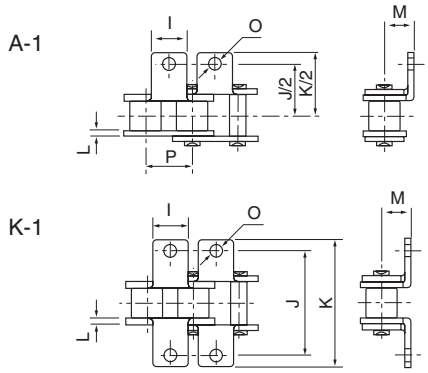

SA-1 & SK-1 Attachments

ISO No.	ANSI No.	P	I	J	Q	L	O
	40	12.700	9.50	19.05	12.70	1.50	3.40
	50	15.875	12.70	25.25	15.90	2.03	5.50
	60	19.050	15.90	29.33	18.30	2.42	5.50
	80	25.400	19.10	34.70	24.60	3.25	6.80
	100	31.750	25.40	43.30	31.80	4.00	9.20
	120	38.100	28.60	51.60	36.50	4.80	9.80
	140	44.450	34.90	62.00	44.50	5.60	11.40
	160	50.800	38.10	69.85	50.80	6.40	13.10
*06B		9.525	8.00	13.50	9.52	1.30	3.50
08B		12.700	9.50	18.90	13.35	1.60	4.30
10B		15.875	14.30	22.95	16.50	1.70	5.30
12B		19.050	16.00	28.60	21.45	1.85	6.40
16B		25.400	19.10	34.00	23.15	3.10	6.40

SA-1 & SK-1 Attachments

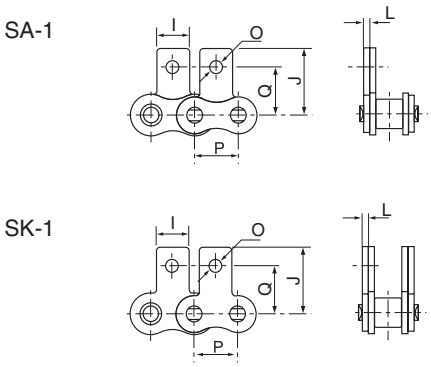

WA-2 & WK-2 Attachments

ISO No.	ANSI No.	P	I	R	J	K	L	M	O
	40	12.700	23.00	12.70	25.40	35.60	1.50	7.90	3.40
	50	15.875	28.80	15.88	31.80	46.80	2.03	10.30	5.50
	60	19.050	34.65	19.05	38.10	56.40	2.42	11.90	5.50
	80	25.400	45.90	25.40	50.80	73.20	3.25	15.90	6.80
	100	31.750	57.65	31.75	63.50	89.80	4.00	19.80	9.20
08B		12.700	24.00	12.70	25.40	36.40	1.60	8.90	4.30
10B		15.875	29.58	15.88	31.80	44.60	1.70	10.31	5.30
12B		19.050	34.05	19.05	38.10	52.40	1.85	13.46	6.40
16B		25.400	46.40	25.40	50.80	72.60	3.10	15.88	6.40

WA-2 & WK-2 Attachments

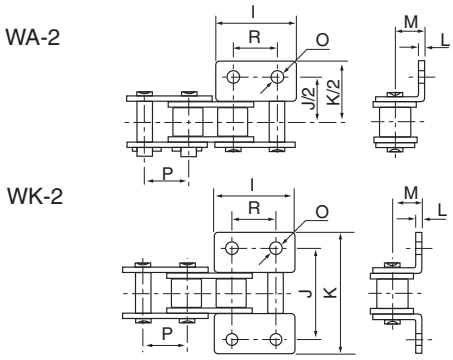

WSA-2 & WSK-2 Attachments

ISO No.	ANSI No.	P	I	R	J	Q	L	O
	40	12.700	23.00	12.70	17.40	12.70	1.50	3.40
	50	15.875	28.80	15.88	23.05	15.90	2.03	5.50
	60	19.050	34.65	19.05	26.86	18.30	2.42	5.50
	80	25.400	45.90	25.40	35.45	24.60	3.25	6.80
	100	31.750	57.65	31.75	44.00	31.80	4.00	9.20
08B		12.700	23.30	12.70	18.90	13.35	1.60	4.30
10B		15.875	29.58	15.88	22.95	16.50	1.70	5.30
12B		19.050	34.05	19.05	28.60	21.45	1.85	6.40
16B		25.400	46.40	25.40	34.00	23.15	3.10	6.40

* Straight side plates

WSA-2 & WSK-2 Attachments

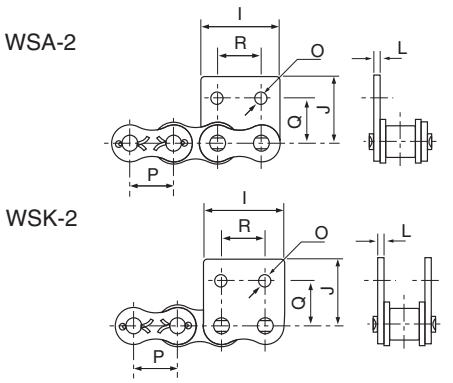

All dimensions in millimetres unless otherwise stated.

Every effort has been taken to ensure that the data listed in this catalogue is correct. Company MR accepts no liability for any inaccuracies or damage caused.

Roller Chain Attachments

Attachment Chain Designation

Packed in 5m Boxes

1. Standard Chains with bent attachment A1 - one hole - one side - every outer

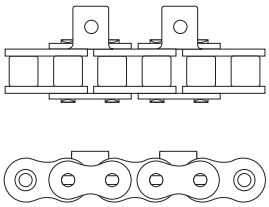

Chain Reference
06BA-2
08BA-2
10BA-2
12BA-2
16BA-2

2. Standard Chains with bent attachment K1 - one hole - both sides - every outer

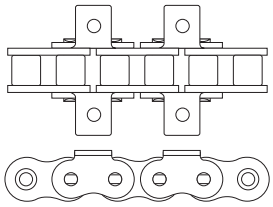

Chain Reference
06BK-2
08BK-2
10BK-2
12BK-2
16BK-2

3. Standard Chains with bent attachment A1 - one hole - one side - every outer and inner

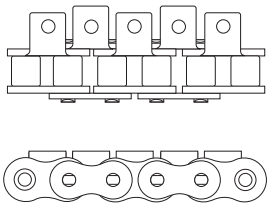

Chain Reference
06BA-1
08BA-1
10BA-1
12BA-1
16BA-1

4. Standard Chains with bent attachment K1 - one hole - both sides - every outer and inner

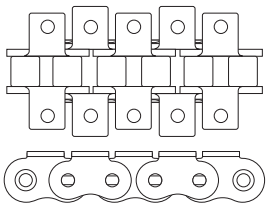

Chain Reference
06BK-1
08BK-1
10BK-1
12BK-1
16BK-1

5. Standard Chains with bent attachment WA2 - two holes - one side - every outer

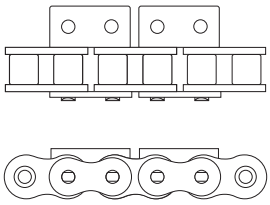

Chain Reference
06BWA-2
08BWA-2
10BWA-2
12BWA-2
16BWA-2

6. Standard Chains with bent attachment WK2 - two holes - both sides - every outer

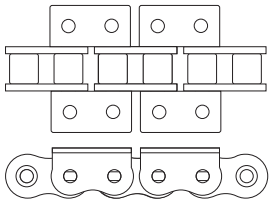

Chain Reference
06BWK-2
08BWK-2
10BWK-2
12BWK-2
16BWK-2

7. Standard Chains with straight attachment SA1 - one hole - one side - every outer

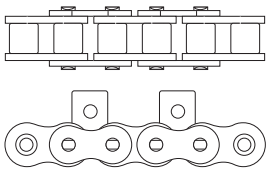

Chain Reference
06BSA-2
08BSA-2
10BSA-2
12BSA-2
16BSA-2

8. Standard Chains with straight attachment SK1 - one hole - both sides - every outer

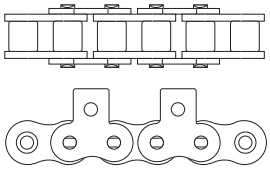

Chain Reference
06BSK-2
08BSK-2
10BSK-2
12BSK-2
16BSK-2

9. Standard Chains with straight attachment SA1 - one hole - one side - every outer and inner

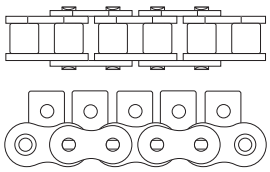

Chain Reference
06BSA-1
08BSA-1
10BSA-1
12BSA-1
16BSA-1

10. Standard Chains with straight attachment SK1 - one hole - both sides - every outer and inner

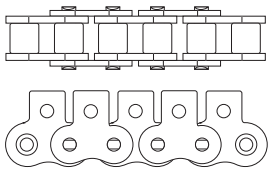

Chain Reference
06BSK-1
08BSK-1
10BSK-1
12BSK-1
16BSK-1

11. Standard Chains with straight attachment WSA2 - two holes - one side - every outer

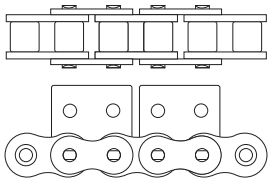

Chain Reference
06BWSA-2
08BWSA-2
10BWSA-2
12BWSA-2
16BWSA-2

12. Standard Chains with straight attachment WSK2 - two holes - both sides - every outer

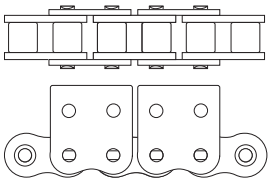

Chain Reference
06WSK-2
08BWSK-2
10BWSK-2
12BWSK-2
16BWSK-1

All dimensions in millimetres unless otherwise stated.

Every effort has been taken to ensure that the data listed in this catalogue is correct. Company MR accepts no liability for any inaccuracies or damage caused.

Double Pitch Chain

Double Pitch Transmission Chain

Double Pitch Transmission Chain

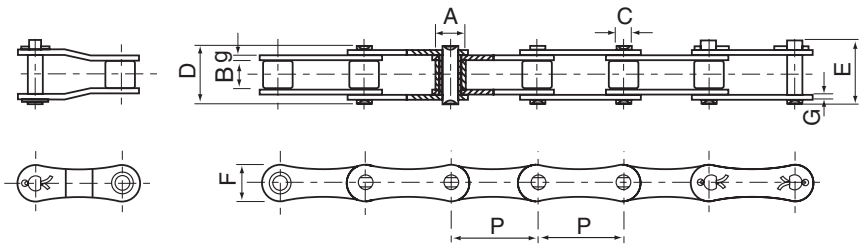

ISO Chain number	ANSI Chain number	Pitch P	Roller diameter A	Width between inner plates B	Pin diameter C	Pin length D	Pin length E	Inner plate height F	Plate thick-ness g/G	Minimum tensile strength kN	Average tensile strength kN	Weight kg/m
	A2040	25.40	7.95	7.85	3.96	16.60	17.80	12.00	1.50	14.10	16.70	0.42
208B		25.40	8.51	7.75	4.45	16.70	18.20	11.80	1.60	18.00	19.40	0.45
	A2050	31.75	10.16	9.40	5.08	20.70	22.20	15.00	2.03	22.20	28.10	0.73
210B		31.75	10.16	9.65	5.08	19.50	20.90	14.70	1.70	22.40	27.50	0.65
	A2060	38.10	11.91	12.57	5.94	25.90	27.70	18.00	2.42	31.80	36.80	1.02
212B		38.10	12.07	11.68	5.72	22.50	25.20	16.00	1.85	29.00	32.20	0.76
	A2080	50.80	15.88	15.75	7.92	32.70	36.50	24.00	3.25	56.70	65.70	1.70
216AH		50.80	15.88	15.75	7.92	36.20	39.40	24.00	4.00	56.70	70.00	2.17
216B		50.80	15.88	17.02	8.28	36.10	39.10	21.00	4.15/3.1	60.00	72.80	1.75
	A2100	63.50	19.05	18.90	9.53	40.40	44.70	30.00	4.00	88.50	102.60	2.55
220B		63.50	19.05	19.56	10.19	41.30	45.00	26.40	4.5/3.5	95.00	106.70	2.62
	A2120	76.20	22.23	25.22	11.10	50.30	54.30	35.70	4.80	127.00	147.30	4.06
224B		76.20	25.40	25.40	14.63	53.40	57.80	33.20	6.0/4.8	160.00	178.00	4.70
228B		88.90	27.94	30.99	15.90	65.10	69.50	36.70	7.5/6.0	200.00	222.00	6.23
232B		101.60	29.21	30.99	17.81	66.00	71.00	42.00	7.0/6.0	250.00	277.50	6.72

Standard boxed lengths are 5 metres
Special lengths available.

Every effort has been taken to ensure that the data listed in this catalogue is correct. Company MR accepts no liability for any inaccuracies or damage caused.

Válečkové řetězy

Speciální řetězy s pogumovanými můstky

Speciální řetězy s pogumovanými můstky - model “UG1”

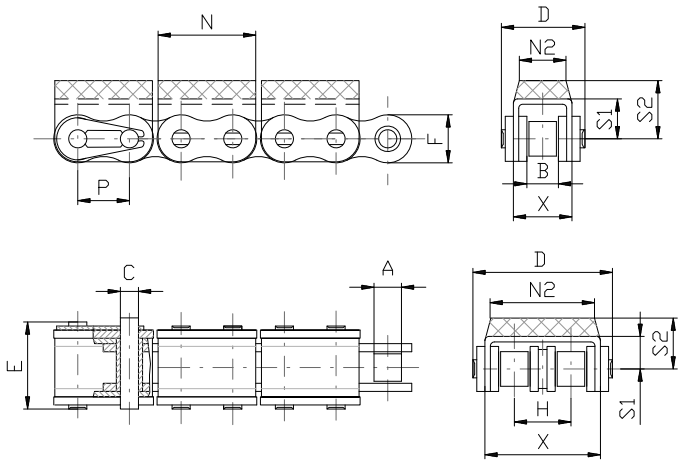

Speciální řetězy s pogumovanými můstky - model “UG2”

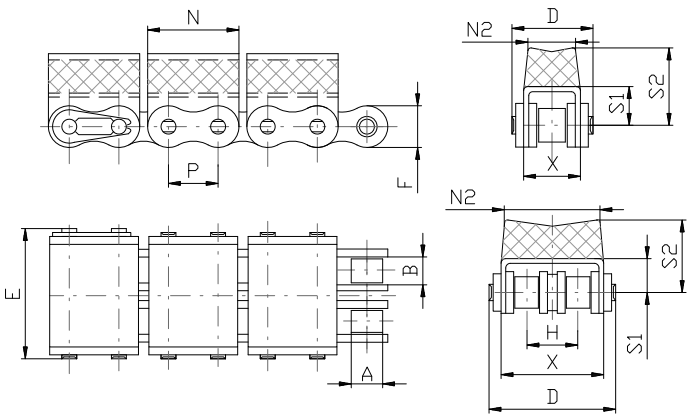

Řetěz Typ / Model	Rozteč P	Průměr válečku A	Vnitřní šířka B	Průměr čepu C	Délka čepu D	Délka čepu spojky E	Výška destičky F	“UG” profil N	“UG” profil N2	“U” Profil S1	“UG” Profil S2	Příčná rozteč H	“U” Profil X	Min. pevnost kN
08B-1/UG1	12.700	7.75	8.51	4.45	20.40	21.80	11.80	24.00	10.00	8.50	13.00	-	14.40	14.600
08B-2/UG1	12.700	7.75	8.51	4.45	34.40	35.80	11.80	24.00	20.00	8.10	12.50	13,92	28.40	28.600
10B-1/UG1	15.875	9.65	10.16	5.08	22.80	24.30	14.70	30.00	13.50	10.60	17.00	-	16.40	18.200
12B-1/UG1	19.050	11.68	12.07	5.72	26.50	28.30	16.00	35.00	12.00	13.00	21.00	-	19.40	23.600
12B-2/UG1	19.050	11.68	12.07	5.72	46.50	48.30	16.00	35.00	36.00	12.00	20.00	19.46	39.40	46.600
16B-1/UG1	25.400	17.02	15.88	8.28	39.20	41.50	21.00	49.00	22.00	15.40	21.40	-	29.40	58.000
16B-2/UG1	25.400	17.02	15.88	8.28	73.00	75.30	21.00	49.00	22.00	15.40	21.40	31.88	29.40	98.000
12B-1/UG2	19.050	11.68	12.07	5.72	26.50	28.30	16.00	35.00	13.50	13.00	21.00	-	19.40	23.600
12B-2/UG2	19.050	11.68	12.07	5.72	46.50	48.30	16.00	35.00	36.00	12.00	28.00	19.46	39.40	46.600
16B-1/UGS	25.400	17.02	15.88	8.28	39.20	41.50	21.00	49.00	29.00	15.40	21.40	-	29.40	58.000
16B-2/UGS	25.400	17.02	15.88	8.28	73.00	75.30	21.00	49.00	29.00	15.40	21.40	31.88	29.40	98.000

Speciální řetězy s pogumovanými můstky - model “UGS”

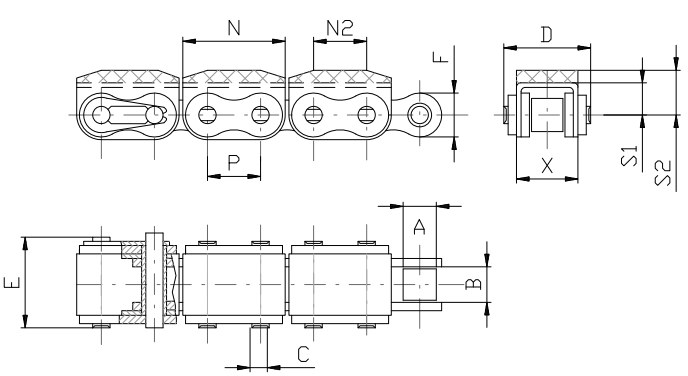

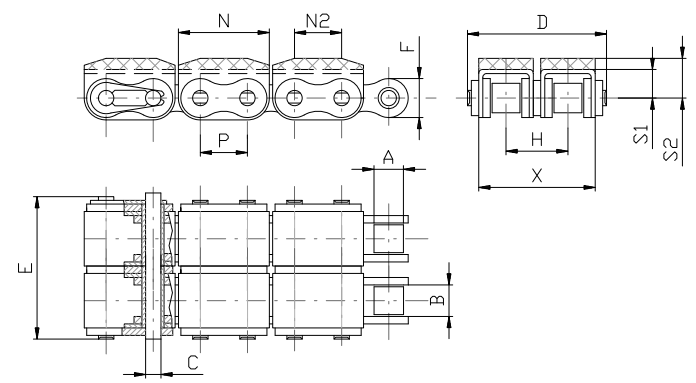

Všechny rozměry jsou v mm, pokud není uvedeno jinak.

Společnost Moravia Řetězy nepřijímá odpovědnost za případné škody, způsobené tiskovou chybou.

Válečkové řetězy

Speciální řetězy s ocelovými můstky

Speciální řetězy s ocelovými můstky - profil “U3”

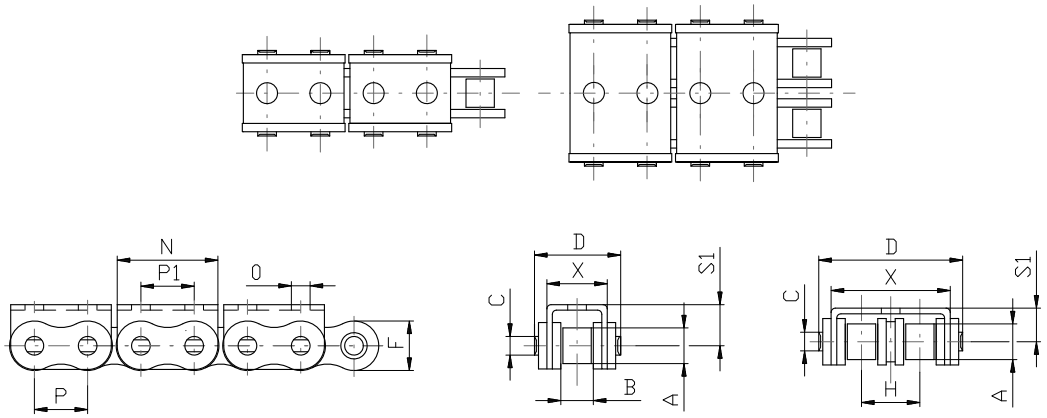

Řetěz Typ / Model	Rozteč P	Průměr válečku A	Vnitřní šířka B	Průměr čepu C	Délka čepu D	Výška destičky F	“U” profil N	Průměr otvoru O	Rozteč otvoru P1	“U” profil S1	“U” profil X	Min. pevnost kN
08B-1/U3	12.700	8.51	7.75	4.45	20.40	11.80	24.00	5.00	12.70	8.50	14.40	14.600
08B-2/U2	12.700	8.51	7.75	4.45	34.40	11.80	24.00	4.00	14.00	8.10	28.40	28.600
10B-1/U3	15.875	10.16	9.65	5.08	22.80	14.70	30.00	5.00	15.80	10.60	16.40	18.200
12B-1/U3	19.050	12.07	11.68	5.72	26.50	16.00	35.00	5.00	19.00	13.00	19.40	23.600
12B-2/U3	19.050	12.07	11.68	5.72	46.50	16.00	35.00	5.00	19.00	12.00	39.40	46.600
16B-1/U3	25.400	15.88	17.02	8.28	39.20	21.00	49.00	5.00	25.40	15.40	29.40	58.000

Speciální řetězy s ocelovými můstky - profil “U2”

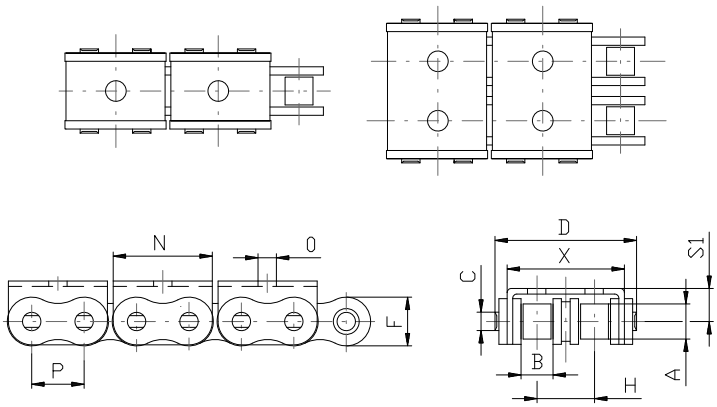

Společnost Moravia Řetězy nepřijímá odpovědnost za případné škody, způsobené tiskovou chybou.

Všechny rozměry jsou v mm, pokud není uvedeno jinak.

Zemědělské řetězy

Zemědělské ocelové řetězy

Zemědělské ocelové řetězy

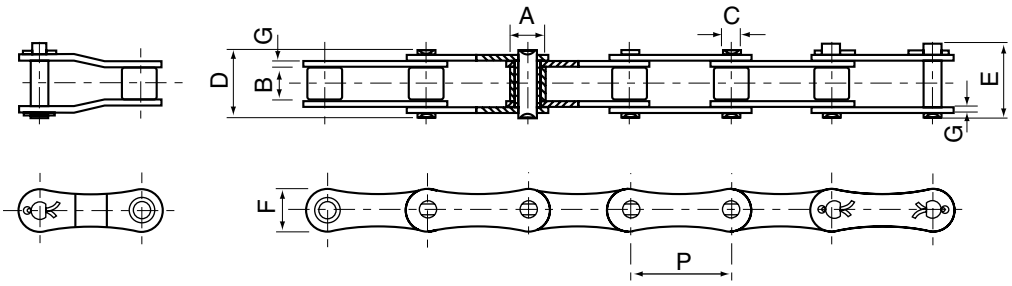

Č. řetězu	Rozteč P	Průměr válečku A	Šířka mezi vnitřními destičkami B	Průměr čepu C	Délka čepu D	Délka čepu E	Výška boční destičky F	Tloušťka destičky G	Minimální pevnost v tahu kN	Průměrná pevnost v tahu kN	Hmotnost kg/m
S32	29.21	11.43	15.88	4.45	26.70	28.80	13.20	1.80	8.00	21.60	0.86
S42	34.93	14.27	19.05	7.00	34.30	37.00	19.80	2.80	27.00	50.80	1.60
S45	41.40	15.24	22.23	5.72	37.70	40.40	17.30	2.80	18.00	36.10	1.66
S52	38.10	15.24	22.23	5.72	37.70	40.40	17.30	2.80	18.00	36.10	1.68
S55	41.40	17.78	22.23	5.72	37.70	40.40	17.30	2.80	18.00	36.10	1.80
S55X	41.40	15.88	20.00	8.28	38.00	40.70	20.00	3.00	50.00	55.00	2.20
S55R	41.40	17.78	22.23	8.90	41.00	44.00	22.40	3.50	45.00	73.10	2.49
S62	41.91	19.05	25.40	5.72	40.30	43.00	17.30	2.50	27.00	36.10	1.87
S77	58.34	18.26	22.23	8.90	43.20	46.40	26.20	4.00	45.00	73.10	2.65
S88	66.27	22.86	28.58	8.90	49.80	53.00	26.20	4.00	45.00	73.10	3.25

Zemědělské ocelové řetězy

Zemědělské ocelové řetězy

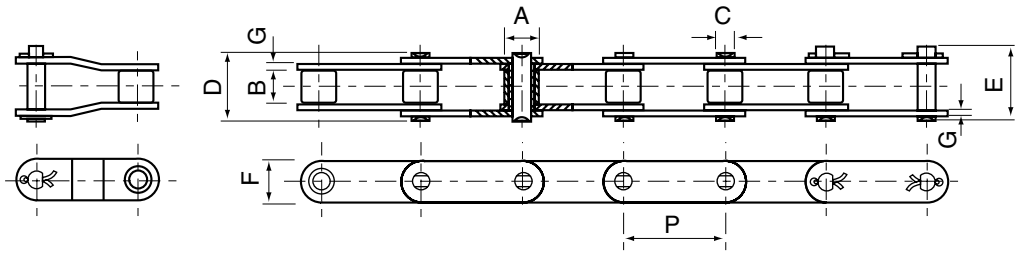

Č. řetězu	Rozteč P	Průměr válečku A	Šířka mezi vnitřními destičkami B	Průměr čepu C	Délka čepu D	Délka čepu E	Výška boční destičky F	Tloušťka destičky G	Minimální pevnost v tahu kN	Průměrná pevnost v tahu kN	Hmonost kg/m
38.4	38.400	15.88	19.05	6.92	33.80	37.00	17.30	2.50	25.00	33.00	1.65
38.4-V	38.400	15.88	18.00	6.92	33.80	37.00	17.30	3.00	31.50	40.00	1.74
38.4-VB	38.400	15.88	19.05	8.27	36.20	39.40	20.50	3.00	45.00	50.00	2.12
CA550	41.400	16.87	19.81	7.19	35.00	38.00	19.30	2.80	39.10	51.20	1.94
CA555	41.400	16.87	12.70	7.19	29.70	33.10	19.30	3.10	39.10	56.00	1.83
CA557	41.400	17.78	20.24	8.00	37.40	40.60	23.10	3.10	55.61	74.30	2.20
CA620	42.010	17.91	24.51	7.19	41.80	45.20	20.20	3.25	39.10	55.10	2.35
CA650	50.800	25.00	27.80	9.53	40.40	44.70	25.00	4.00	80.00	95.50	3.49
CA2060H	38.100	11.91	12.70	5.94	29.74	31.72	17.45	3.25	31.28	40.50	1.50
CA2063H	38.100	11.89	12.70	5.94	29.40	34.20	19.30	3.25	31.28	40.50	1.65

Všechny rozměry jsou v milimetrech, pokud není uvedeno jinak.

Zemědělské řetězy

Unášeče S Série A1 & K1

Č. řetězu	P	G	J	K	M	O	W
S32	29.21	1.80	21.50	30.50	8.60	5.30	6.90
S42	34.93	2.80	27.00	37.45	14.00	8.30	11.50
S45	41.40	2.80	27.00	37.50	11.40	8.50	11.70
S52	38.10	2.80	29.40	39.00	11.40	8.30	9.90
S55	41.40	2.80	27.00	37.50	11.40	8.50	11.70
S62	41.91	2.50	33.40	47.70	11.40	6.50	13.00
S77	58.34	4.00	38.10	50.80	20.80	8.40	11.70
S88	66.27	4.00	48.50	59.70	20.80	8.40	10.00

A1 = Unášeč pouze jednostranný

K1 = Unášeč oboustranný

Unášeče A1 & K1

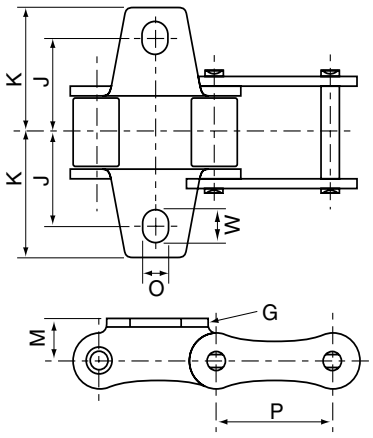

Unášeče 38.4 & CA Série A1 & K1

Č. řetězu	P	G	J	K	M	O	W
38.4	38.40	2.50	29.00	41.50	15.40	9.00	
38.4-V	38.40	3.00	28.75	41.00	15.40	9.00	
38.4-VB	38.40	3.00	29.00	43.50	14.00	10.50	
CA550	41.40	2.80	26.25	38.10	12.70	8.30	10.00
CA557	41.40	3.10	25.40	36.00	15.90	8.70	

A1 = Unášeč pouze jednostranný

K1 = Unášeč oboustranný

Unášeče A1 & K1

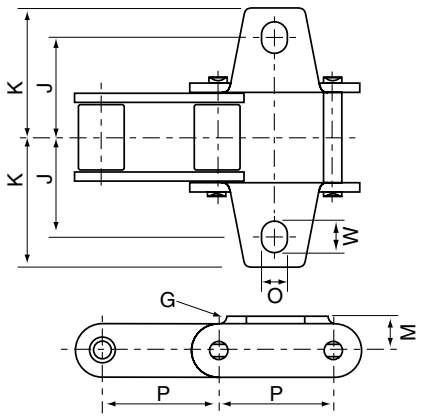

Unášeče S, 38.4 & CA Série SD

Č. řetězu	P	G	Q	J	K	H	X	O
S45	41.40	2.80	26.00	29.00	44.25	16.00	24.00	6.40
S55	41.40	2.80	26.00	29.00	44.25	16.00	24.00	6.40
38.4	38.40	2.50	37.00	26.00	35.50	24.00	38.40	8.40
38.4-VB	38.40	3.00	34.00	26.00	35.50	25.00	32.40	6.50
CA550	41.40	2.80	42.90	23.80	34.10	31.00	36.90	8.70

Unášeče SD

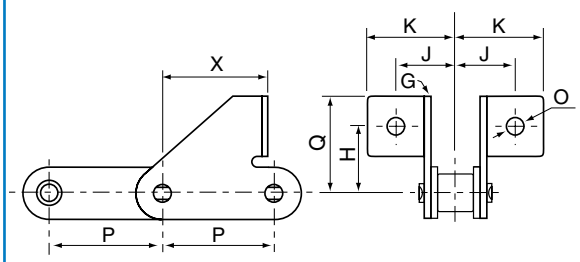

Všechny rozměry jsou v milimetrech, pokud není uvedeno jinak.

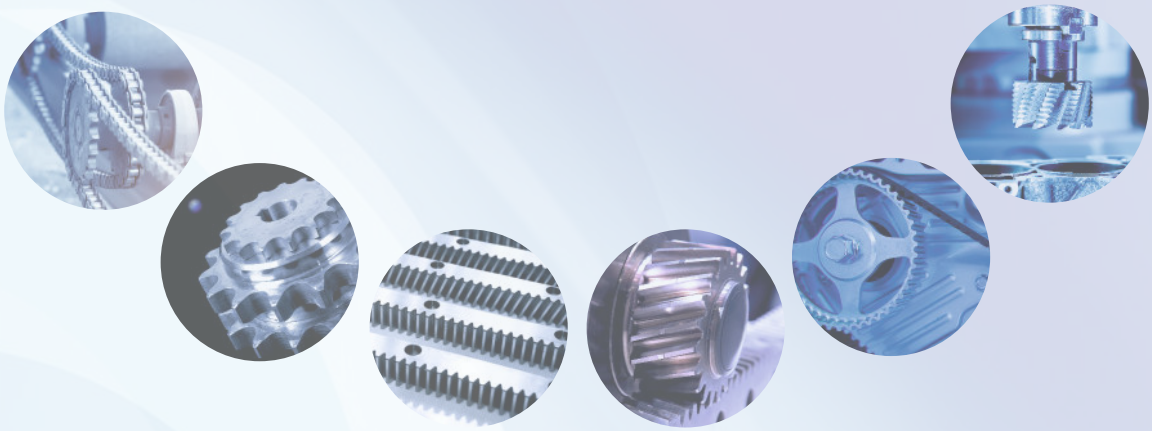

MoraviaŘetězy

MORAVIA ŘETĚZY a.s.
Hulínská 1799/1 (areál Magneton a.s.)
767 01 Kroměříž

Tel: +420 573 334 106
Fax: +420 573 330 556

email: obchod@moravia-retezy.cz
www.moravia-retezy.cz

email: infosk@moravia-retezy.cz
www.mr-retaze.sk

email: sales@moravia-retezy.cz
www.mr-chains.com

email: infode@moravia-retezy.cz
www.mr-ketten.de

email: infopl@moravia-retezy.cz
www.mr-lancuchy.pl

www.moravia-retezy.cz